Application No._____

COUNTY OF WARREN
HIGHWAY ACCESS AND CONSTRUCTION PERMIT

APPLICATION/AGREEMENT

Applicant/
Owner: _____

Address: _____

_____

Phone No.: _____ Fax: _____

Description of Work:

_____

_____

Four (4) sets of Plans, Construction Cost Estimate are required

Please be advised that a separate permit will be required by the property owner for trenching and installation of any underground electric, telephone, cable T.V. or telecommunications services if not included in the above description of work.

Municipality _____ Lot _____ Block _____ Route / Bridge No. _____

The property must have final subdivision and/or site plan approval prior to submission if applicable. A copy of the approved plan must be submitted with the application.

In consideration of the granting of this permit by the Board of County Commissioners, the subscriber hereby agrees to perform all work in accordance with the current standards of the County of Warren and/or as directed by the County Engineer.

The subscriber further agrees to indemnify and save harmless the said County of Warren from any and all claims for damages to the applicant, public, adjacent property owners, or any other persons arising out of the work to be performed as set forth in this application. The subscriber further agrees to carry and maintain comprehensive general liability insurance covering the work included in this permit at the coverages required by the County.

All funds and deposits submitted to the County will be forfeited to the County to cover any and all costs incurred to correct or complete work not performed in accordance with this agreement.

Date: _____

Applicant/
Owner: _____

Witness: _____

Revised 1-15-02
Revised 5-20-05
Revised 7-30-07
Revised 6-8-21

WARREN COUNTY

HIGHWAY AND BRIDGE

STANDARDS

Adopted: December 8, 2010
Effective: January 1, 2011

SECTION 8 - DRIVEWAY IMPROVEMENTS

8.01 GENERAL

Driveways which intersect the right-of-way line of any County road within the County of Warren will not be constructed or modified unless a highway access and construction permit is first obtained from the Warren County Engineer.

8.02 NUMBER OF DRIVEWAYS

The number of driveways allowed from a site directly to a County road shall be as follows:

Length of Site Frontage	Number of Driveways
150 feet or less	1
More than 150 to 800 feet	2
Over 800 feet	To be specified by the County Engineer

8.03 DRIVEWAY LOCATIONS AND SIGHT DISTANCE REQUIREMENTS

a. Driveways and development entrances shall be so designed as to maximize the sight distance along the County road. The County Engineer may require the applicant to submit sight line profiles and cross-sections which demonstrate that the applicant's plans provide adequate sight distance along the County road.

b. Sight Distance Requirements

(1) Any driveway to a County road or driveway lane shall be so designed in profile and grade and shall be so located to meet the minimum sight distances as shown on detail T3 of these standards (see appendix for detail T3). The required sight distance shall be measured using a height of three and one half feet (3½) for the driver's eye and for the approaching vehicle. The measurement from the driveway shall be from a point twenty eight feet (28') from the centerline of the County road or 8 feet from the edge of pavement or stop bar, whichever yields the greatest offset from the centerline of the road. The line of sight shall be a minimum of six inches (6") above any paved area, twelve inches (12") above any lawn area, and twenty four inches (24") above all other vegetated areas along its entire length.

(2) The sight line must stay within the County right-of-way or a sight easement must be obtained from the adjoining property owner(s). The easement line shall be set a minimum of five feet (5') parallel to the sight line.

(3) Obstructions from the line of sight to the edge of pavement such as trees, brush, embankment, vegetation, etc., will have to be removed by the permittee to assure proper visibility. The line of sight shall be a minimum of six inches (6") above any paved area, twelve inches (12") above lawn areas, and twenty four inches (24") above all other vegetated areas. Sight line obstructions must be cleared prior to other construction on the

site.

c. Driveways shall provide for a turn around area outside of the County right-of-way.

d. Where a site occupies a corner of two (2) intersecting roads, no driveway entrance or exit shall be located within one hundred twenty five feet (125') of the centerline of the intersecting road, unless otherwise approved by the County Engineer. Additional separation distance may be required if warranted by site conditions. The driveway shall access to the road with the lesser road classification, unless sight distance or other hazardous conditions dictate otherwise.

   If it is anticipated that the intersection may be signalized in the future, the driveways shall be located far enough from the intersection so as to not interfere with any signal detectors installed or turning lanes.
   In order to minimize the conflicts of driveways entering a County road, the County Planning Board may require the design of common accesses or marginal service roads in an effort to minimize the number of traffic movements to and from the County road.

e. No driveway shall be located on the following portions of a County road:

   (1) On a ramp of an interchange.

   (2) Not within fifty feet (50') of the beginning of any ramp or other portion of an interchange.

f. Where two (2) or more driveways connect a single site to any one County road, a minimum clear distance of fifty feet (50') measured along the right-of-way line shall separate the closest edges of any two (2) such driveways.

g. A minimum of ten feet (10') shall be provided from the end of the return radius or flare and the extension of the property line to the edge of the pavement.

8.04 DRIVEWAY DIMENSIONS

a. The dimensions of driveways shall be designed to adequately accommodate the volume and character of vehicles anticipated to be using the driveway.

b. Single family residential driveways will be ten feet (10') to twenty feet (20') in width with five feet (5') to ten feet (10') radii or a flared pavement at the roadway.

c. Common driveways serving two (2) single family residential lots shall be twenty feet (20') to twenty four feet (24') width with minimum ten feet (10') radius returns.

d. All other driveways shall be designed with twelve feet (12') wide lanes and fifteen feet (15') to twenty five feet (25') pavement radii depending on the use. When the pavement is curbed, an additional two feet (2') in width will be added to the curbed side. Driveways serving large volumes of daily traffic or traffic over twenty five percent (25%) of which is truck traffic shall add sufficient shoulder width to the pavement to safely accommodate all movements. The required width shall be provided for a minimum of fifty feet (50') from the edge of the County road pavement.

8.05 DRIVEWAY ANGLE AND PROFILE

a. Driveway Angle

(1) Driveways shall intersect the County road an angle to as near ninety degrees (90°) as site conditions will permit and in no case shall be less than seventy five degrees (75°).

b. Driveway Profile

(1) The slope of the driveway from the edge of pavement to the gutter line shall normally be two percent (2%) to four percent (4%) or as directed by the County Engineer.

(2) The first twenty five feet (25') from the proposed gutter line of the County road shall be no greater than six percent (6%) positive or negative.

(3) Any vertical curve on a driveway shall be flat enough to prevent the dragging of any vehicle undercarriage.

(4) Should a sidewalk be so close to the curb at a depressed curb driveway as to cause the ramp to be too steep and be likely to cause undercarriage drag, the sidewalk shall be appropriately lowered to provide a suitable ramp gradient.

c. Proposed Gutter Line

The proposed gutter line shall be twenty two foot (22') minimum from the centerline of the road and shall be designed to provide uninterrupted flow of storm water, unless directed otherwise by the County Engineer's Office.

8.06 TURNING LANES AT DRIVEWAYS

a. Any major or minor driveway to a County road shall, as a minimum, provide pavement widening in accordance with the typical details included in the Appendix of these standards. This work shall be constructed as an on-site improvement.

b. Left Turn Lanes

When warranted, a left turn lane may be required. All turn lanes shall be constructed in accordance with AASHTO guidelines and the recommendation of the County Engineer.

8.07 DRAINAGE AND EROSION CONTROL

a. Drainage Discharge

Driveways accessing County roads shall be constructed and maintained in such a manner as to prevent the direct discharge of storm water from the driveway onto the County road pavement. Driveways in excess of one hundred feet (100') in length or ten percent (10%) in grade directing runoff to the County road should be designed with runoff diversions that direct driveway runoff across the property to avoid high peak discharge at the County gutter than can result in erosion and flooding along the roadway. The County may require a driveway storm drainage collection

system to tie into adjacent County storm drainage.

b. Drainage Interference

All driveways constructed or altered within the County public road right-of-way shall be constructed in such a manner as not to interfere with the drainage along the existing pavement or traveled way. Under no circumstances shall the driveway be allowed to extend beyond the edge of the existing ditch or gutter line and create a hump or uneven driving surface on the pavement or traveled way or shoulder.

c. Gutters

The construction of a properly sized dish type gutter will be permitted provided that existing water flow will not be blocked, altered or changed in any manner.

d. Culvert Pipes

In cases where drainage ditches exist along County roads where a driveway is to be constructed, a reinforced concrete pipe must be installed under driveway. The size of this pipe is to be determined by the applicant using the Rational Method and based on a twenty five (25) year storm. In no case is a pipe of less than fifteen inches (15") in diameter to be installed. If more than one driveway is to be constructed, a continuous storm drain pipe shall be installed between the driveways or connected to an intervening storm drain system. If the proposed drainage pipe connects with an existing storm drainage system, a catch basin shall be constructed. Pipes are to be placed at the toe of a 2:1 slope, beginning at a point twenty two foot (22') minimum from the centerline of the County road. In most cases the center of the pipe will be no less than twenty six feet (26') to twenty eight feet (28') from the centerline of the County road.

e. Erosion Control

All driveways shall be constructed and maintained at all times in such a manner as to prevent erosion of the soil from them and land adjoining them. Water and silt shall be prevented from running onto the public roadways, filling up road gutters, catch basins, inlets or drainpipes. All construction and alteration work must be done in accordance with the "*Standards for Soil Erosion and Sediment Control in New Jersey*".

8.08 CONSTRUCTION

a. General

No driveway construction will be started without first obtaining a Warren County Highway Access and Construction Permit.

b. Construction Material

Any new or altered driveway, accessing a County road shall be paved for a minimum distance of twenty five feet (25') from the existing County road edge of pavement. Pavement construction shall be as follows:

(1) Residential driveways

(a) 6" of dense graded aggregate (DGA) base course, thoroughly rolled and compacted.

(b) 2" of bituminous concrete surface course, Mix I-5, thoroughly rolled and compacted.

(2) Access roads, major driveways, and minor driveways

(a) 6" of dense graded aggregate (DGA) base course, thoroughly rolled and compacted.

(b) 4" bituminous concrete stabilized base course, Mix I-2, thoroughly rolled and compacted.

(c) 2" of bituminous concrete surface course, Mix I-5, thoroughly rolled and compacted.

(3) All material shall comply with *"New Jersey Department of Transportation Standard Specifications for Road and Bridge Construction"*.

c. Where curbs exist, a full section of curb shall be entirely removed and depressed curb constructed in accordance with the *"New Jersey Department of Transportation Standard Specifications for Road and Bridge Construction"*. Curb radii of existing curbs shall not be broken or depressed.

d. Where concrete sidewalks exist or are proposed to be constructed as part of a project, a reinforced concrete ramp not less than six inches (6") in thickness shall be built connecting the inner edge of the depressed curb with the outer edge of the sidewalk. Outer edge of sidewalk must carry the same grade as existing sidewalk and not be depressed.

e. All vegetation, embankments and obstructions which obstruct the sight distance shall be removed if adjoining properties are effected by the clearing of site line the permittee is responsible for coordinating this work with adjoining property owner.

SECTION 9 - BRIDGE AND CULVERT IMPROVEMENTS

9.01 GENERAL

a. New Bridges and Culverts

The County may assume ownership and future maintenance responsibilities for a new culvert or bridge on a running stream for a new public road within a development under the following conditions:

(1) The new structure has a cross sectional area equal to or larger than a forty eight inch (48") pipe.

(2) The structure has been designed in accordance with all County standards and requirements as approved by the County Engineer.

(3) Complete plans and specifications have been reviewed and approved by the County

SECTION 11 - HIGHWAY ACCESS AND CONSTRUCTION PERMIT

11.01 GENERAL

a. No person, persons, partnership, association or corporation shall excavate, dig, test drill, tunnel, construct or reconstruct or otherwise disturb any public street, road, highway, curb, sidewalk, bridge, culvert, utility structure or other public improvement or facility located within, over or under any public right-of-way, easement, or publicly owned property of the County of Warren, for the purpose of laying, changing, repairing, connecting, constructing or maintaining any water, gas, sewer pipe, or any electric, telephone, telegraph pipes or conduits, or for any other purpose whatsoever, without first having obtained a permit from the County Engineer, in accordance with the rules, procedures, and specification herein set forth, and without having first paid the required fees and posted guarantees as required by these regulations, unless specifically exempted. These requirements include all work in the immediate area around County bridges and culverts on municipal roads.

b. No person, persons, partnership, association or corporation shall construct, widen, alter, narrow, relocate, pave or modify the grade of a driveway or change the prior existing drainage from the driveway onto the County road without first obtaining a permit from the County Engineer. The term driveway, in addition to its regularly accepted common meaning, shall also refer to any lane, way or privately owned road. A field entrance shall not be considered an existing driveway and any improvements thereto or change of use shall require a permit.

c. County Owned Rights-of-Way: The Board of Chosen Freeholders of the County of Warren reserves the right to refuse the use of its fee simple road rights-of-way to any person or entity intending to install permanent improvement in, on or under same. This article shall only apply to County road rights-of-way which are owned in fee simple absolute by the County of Warren and shall not apply to same upon which the County simply possesses an easement for public conveyance.

d. Exemptions

(1) The provisions of this regulation shall not apply to work involved within the rights-of-way of roads or easements owned, regulated and within the responsibility of the municipalities of the County of Warren (other than the County) or the State of New Jersey, or their various departments, bureaus or agencies, except in the immediate area affecting County bridges and culverts.

(2) The provisions of this regulation shall not apply to the installation, erection, replacement or maintenance of wood utility poles for electric distribution, telephone or telegraph installations, nor to such other appurtenances such as stub poles, anchors, guys or ground lines, incidental to these poles, where such poles and appurtenances belong to any of the franchised public utility companies operating within the County.

e. Notice of Restriction on Disturbing Completed Pavement

No person shall be granted a permit hereunder to open any County road within five (5) years subsequent to the construction or reconstruction of the surface of the pavement thereon. This prohibition shall apply only to improved County roads paved with bituminous concrete overlay

or portland cement concrete pavement.

Permission may be granted under circumstances where a hardship can be demonstrated and it is determined that the health, safety or welfare of the residents of Warren County would not be adversely affected. The County Engineer may include such additional terms and conditions as appropriate with the permit approval.

f. Emergency Approvals

If a request for a construction permit comes to the attention of the County Engineer and the subject matter of this request involves an imminent threat to the health, safety or welfare of the residents of the County of Warren, the County Engineer may authorize a preliminary opening subject to immediate application to the County.

g. All construction shall be governed by the current edition of the "*New Jersey Department of Transportation Standard Specifications for Road and Bridge Construction*", supplements and amendments thereto.

h. Right-of-Way Encroachment

No part of the Country road right-of-way shall be used for the conduct of private business. The County road right-of-way is to be kept clear of buildings, sales or merchandise displays, vehicular parking areas, servicing of vehicles, service equipment and appurtenances thereto.

11.02 APPLICATION

a. Application for a permit must be made on the standard forms provided by the Engineer, must be filled out completely in the number of copies specified on the form, and filed with the Engineer, along with the required nonrefundable permit fee and other exhibits that may be required, either under the terms of this regulation, or as outlined on the form. The applicant must be the property owner or facility owner and the application must be signed by the applicant or a duly authorized representative.

b. The applicant shall file, along with the permit form, an estimate of the cost of the proposed improvements and an estimate of the starting and completion dates. Cost estimates are subject to review and approval by the County Engineer.

c. Application Period

All required submittals for the permit application need to be provided within six (6) months of the date of application. After the expiration of the application period any escrow funds held by the County will be returned to the applicant. The application fee is nonrefundable.

11.03 PERMIT FEE

The permit fee submitted with the application shall be in the amount shown in the "Permit Fee Schedule" in the Appendix. This fee shall be used to cover the costs of administering the program. Additional inspection and construction administration fees are covered in a later section.

The permit fee shall be in the form of a personal or company check and is non-refundable.

11.04 PLAN INFORMATION

a. Driveways

(1) A site plan shall be provided with information which shall include property lines and boundaries, location of all existing driveways, the entire length of the proposed driveway, existing and proposed storm drainage, utilities, trees and shrubbery, existing road pavement, existing right-of-way, available site distance, existing and proposed grades, proposed driveway pavement, a turn around area outside the right-of-way, and any other information deemed necessary to properly analyze the installation. The site plan shall be drawn at a scale not greater than 1"=30'. Plans for new driveways shall be prepared by a professional engineer or licensed land surveyor.

(2) Driveway plans must include a profile at a scale not greater than 1"=30' horizontal and 1"=3' vertical of the proposed driveway location from the centerline of the County road to a point at least one hundred feet (100') from the existing edge of pavement. The driveway profile for the first twenty five feet (25') from the proposed gutter line of the County road shall be not greater than six percent (6%). The driveway profile shall show the existing and proposed centerline grades.

b. Utility Repairs and Service Connections

(1) Key Map, showing schematically the location of the proposed opening relative to surrounding streets or other key landmarks.

(2) Existing facilities such as pavement, curbing, sidewalk, driveways, drainage culverts and structures, utilities in the working area.

(3) Details of proposed opening and work to be done, including excavation, plan, profile and appropriate sections of the opening, and construction details.

c. Construction, Reconstruction and Relocations

(1) The plans required for a construction permit shall conform with the standards outlined in Section 3 "General" and Section 4 "Road and Bridge Plans, Cross Sections, Profiles and Details".

(2) Plans must show sufficient horizontal and vertical control points throughout the project.

11.05 CONSTRUCTION COST ESTIMATE

A construction cost estimate will be prepared for all work performed within the County right-of-way. The cost estimate shall show all items of work with quantities and unit costs.

11.06 PERFORMANCE GUARANTY

a. A performance guaranty in the amount equal to one hundred twenty percent (120%) of the

construction cost estimate and as-built plan cost shall be provided as security for the faithful performance of all work. The performance guaranty shall be a certified check, bank draft, irrevocable letter of credit or performance bond. The performance guaranty for a residential driveway shall be certified check or bank draft only. Surety company bond forms meeting the requirement of the State of New Jersey are acceptable. The performance guaranty will be returned to the applicant upon successful completion of all work and acceptance by the County Engineer. If all work is not completed in conformance with the permit requirements, the County may, at its option, use the performance guaranty to complete all work affecting the County road, bridge, culvert or drainage system.

b. Public Utilities: Public Utilities Corporation of the State of New Jersey may, in lieu of the above performance guaranty, file a corporate bond on a yearly basis in an amount of ten thousand dollars ($10,000.00). Such corporation bond would cover all construction operations of the Public Utility Corporation within the County, thereby exempting said utility from the necessity to file performance guaranties for individual opening projects. However, such public utility corporations, operating under the terms and protection of a corporate bond, will still be required to make application for each opening permit, to file the permit fee and to pay all costs to the County.

11.07 INSPECTION AND CONSTRUCTION ADMINISTRATION FEES

The applicant shall deposit, prior to final approval of the application, a sum adequate to cover all resident project representative costs (inspection) and construction administrative costs incurred by the County. The fee will be determined by the County Engineer based on the scope of the project. Any unused funds at the completion of the project will be returned to the applicant

11.08 INSURANCE

a. The permittee and/or contractor shall continuously maintain insurance and other security for adequate protection of all his work from damage and shall protect the County's property from damage, injury or loss arising in connection with the contract. The permittee and/or contractor shall completely indemnify the County in regard to any such damage, injury or loss. The successful bidder shall take all necessary precautions for the safety of personnel on the work site and shall comply with all applicable provisions of federal, state and municipal safety laws and building codes to prevent accidents or injury to persons on, about or adjacent to the premises where the work is being performed. The permittee and/or contractor shall erect and properly maintain at all times, as required by the conditions and progress of the work, all necessary safeguards for the protection of workmen and the public. If it becomes necessary for the permittee, either as principal or by agent or employee, to enter upon the premises or property of the County in order to construct, erect, inspect, make delivery, or remove property hereunder, the permittee hereby covenants and agrees to take, use, provide and make all proper, necessary and sufficient precautions, safeguards, and protection against the occurrence of happenings of any accidents, injuries, damages or hurt to any person or property during the progress of the work herein covered, and to be responsible for and to indemnify and safe harmless the County from the payment of all sums of money by reason of all, or any, such accidents, injuries, damages, or hurt that may happen or occur upon or about such work.

b. The permittee and/or contractor shall procure and maintain:

(1) Worker's Compensation and Employer's Liability Insurance in conformance with all statutory requirements prescribed by law, including employer's liability at a limit of $500,000 each accident, which shall be maintained in force during the life of this permit by the permittee and/or contractor, covering all employees engaged in performance of this permit in accordance with the applicable statute.

(2) General Liability Insurance with limits of not less than $1,000,000.00 for any one person and $1,000,000.00 for any one accident for bodily injury and $1,000,000.00 aggregate for property damage, shall be maintained in force during the life of the permit by the permittee and/or contractor. The permittee and/or contractor shall procure and maintain an Umbrella or Excess Policy with limits of not less than $5,000,000.00 for any one person or any one accident for bodily injury, unless a lesser limit is approved by the County. In the event more than one insured is named in the policy, a cross-liability endorsement shall be included which provides that the employees of each of the named insured are not excluded under the policy in respect to claims that are made against other named insured.

(3) Automobile Liability Insurance covering permittee and/or contractor for claims arising from owned, hired and no-owned vehicles with limits of not less than $1,000,000.00 for any one person and $1,000,000.00 for any one accident for bodily injury and $1,000,000.00 each accident for property damage, shall be maintained in force during the life of this permit by the permittee and/or contractor.

c. Lesser insurance coverages may be allowed for projects with moderate or medium liability exposure in accordance with the County's insurance coverage guidelines. Major or high hazard projects undertaken may require higher limits and specific coverages as recommended by the County's insurance agent.

d. Certificates of the required insurance as listed above shall be submitted with the Warren County Board of Chosen Freeholders listed as additional insured and the certificate holder listed as follows:

County of Warren
Board of Chosen Freeholders
165 County Route #519 South
Belvidere, NJ 07823-1949

c/o Warren County Engineer's Office

A thirty (30) day notice of cancellation provision shall also be provided.

11.09 UNDERGROUND FACILITIES PROTECTION ACT

The *Underground Facilities Protection Act (NJSA 48:2-73 et. seq.)* requires all excavators to notify the One-Call Damage Prevention System prior to excavation or demolition. The County construction permit is not valid until the One-Call confirmation number is received by the County Engineer's Office.

11.10 SOIL EROSION AND SEDIMENT CONTROL PERMIT

A soil erosion and sediment control permit may be required for construction activities pursuant to NJSA 4:24-39 et. seq.). It is the applicant's responsibility to contact the Warren County Soil Conservation District, 224 W. Stiger Street, Hackettstown, New Jersey 07840 (908-852-2579) to determine what is required.

11.11 COUNTY SHADE TREE PERMIT

Removal or disturbance of any tree eight inches (8") or larger in diameter will require a permit from the Warren County Shade Tree Commission. It is the applicant's responsibility to obtain this permit prior to construction.

11.12 CONSTRUCTION AND INSPECTION PROCEDURES

a. Work Schedule

No work on this permit shall be performed on Saturdays, Sundays or County and legal holidays.

The County may waive this requirement only if it is in the County's best interest for public safety or construction conditions that warrant job continuation. In the event work is performed on Saturdays or legal holidays, the County will charge for the Resident Project Representative at a rate of two (2) times the hourly salary of the County employee. In the event a private consultant is providing these services, the charge will be the actual cost billed to the County if it is above the normal daily rate.

b. Accident Prevention

The Permittee and his contractor shall take all necessary precautions to ensure safety at all times with all construction related activities. The U. S. Department of Labor, "*Occupational Safety and Health Administration (OSHA) Regulations 29 CFR*" shall be complied with at all times.

The Permittee's attention is particularly directed to the requirements of the current Construction Safety Code promulgated by the New Jersey Department of Labor and Industry, Bureau of Engineering and Safety. Article 3.6 of the Construction Safety Code states the requirements regarding reporting of accidents involving injury, loss of life and property damage.

Failure to comply with applicable safety standards will result in appropriate action by the County to ensure that safety is maintained on the project.

c. Maintenance and Protection of Traffic

The developer and its contractor shall be responsible for maintenance and protection of traffic during construction along or adjacent to the County highway. The current edition of the "*Manual on Uniform Traffic Control Devices for Streets and Highways* (MUTCD)", U. S. Department of Transportation (USDOT), and all amendments thereto, shall govern the maintenance and protection of traffic during construction.

d. Commencement of Work

Prior to the commencement of work, the contractor shall call the New Jersey One-Call Damage Prevention System (1-800-272-1000) for the mark out of all underground utilities. **The permit is not valid until the permittee submits their one-call confirmation number to the Warren County Engineer's Office.**

At least twenty four (24) hours before the permittee plans to commence work under an opening permit, the permittee shall advise the local police chief (State Police barracks, if applicable) and the Engineer, that the work is to start.

e. Supervision

The permittee shall have a qualified supervisor at the site of the opening work during all working hours.

f. Inspection

The Engineer shall be given access to the construction site during progress of the work in order to observe and inspect the work. All materials, including excavated materials, are subject to inspection and approval by the Engineer. Where the planned opening will be made through, adjacent to or near an existing public utility facility, the permittee shall notify said utility company, whose representative shall be given access to the construction to observe and inspect that portion of the work involving said utility facility.

g. Protection of Private Property

Prior to starting work on the opening, it shall be the responsibility of the permittee to advise each nearby or adjacent property owner, whose property will be temporarily inconvenienced or disturbed by the project when the work will be commenced and what effect the work will have on the owner's use of his property. The permittee will be solely responsible for any damage, inconvenience or disruption to nearby or adjacent properties, and will save the County harmless from any claims arising from the conduct of work. It will be the permittee's obligation and responsibility to arrange for any rights of entry or easements needed. The permittee shall not store tools, machinery, materials, dirt or debris on private property. The permittee shall not use water, electricity, telephone or other private facilities without first obtaining permission from the property owner.

h. Conduct of the Work

The work shall be done in an efficient and workmanlike manner and in accordance with the plans and specifications, using proper tools, machinery, materials and manpower to effect a quality and expeditious job. Failure to perform in a manner satisfactory to the Engineer according to the standards set forth herein may result in revocation of the permit. Where the Engineer deems it necessary for the protection of the public, or to proper installation of the permittee's facilities, he may order a cessation of work by the permittee pending such action by the Board of Chosen Freeholders, provided that such cessation order by the Engineer may in no event exceed eight (8) days in duration. Except under emergency conditions, all work will be conducted between the hours of 7:00 A.M. and 7:00 P. M. or dusk, whichever comes first.

i. Street Closings

The contractor shall not close or obstruct any streets, sidewalks, alleys or passageways unless specifically authorized. No material whatsoever shall be placed or stored in streets, alleys or passageways. The contractor shall conduct its operations so as to interfere as little as possible with the use ordinarily made of any roads, streets, driveways, alleys, sidewalk facilities, etc., near enough to the work to be affected thereby.

j. Cleanliness

If dust, dirt, air pollution, poor housekeeping or detrimental material are allowed to exist, occur or continue as a result of the work to the point where the public is unduly inconvenienced or disturbed, in the opinion of the Engineer, the Engineer may stop the work until the situation complained of is eliminated. Streets are to be kept broom-cleaned on a daily basis. If dust persists, streets may be required to be hosed clean; the Engineer may direct the permittee or his contractor to spread dust inhibiting chemicals.

11.13 AS-BUILT CONSTRUCTION PLANS

Surveyed as-built locations, dimensions, elevations and information shall be provided on the approved design plans so that the County Engineer can compare the information and verify that the construction conforms to the approved design. Upon approval of the as-built construction, final plans with the as-built information shall be prepared and submitted to the County.

One set of reproducible as-built county road and/or bridge improvement plans prepared in ink on 4 mil mylar and in AutoCAD format on a standard compact disk or other approved media, shall be submitted to the County Engineer upon completion and approval of all improvements. Plan shcct size shall be twenty four inches (24") x thirty six inches (36"). The compact disk needs to include necessary font files, image files, files for plotting (i.e. .pc2, .ctb, etc. files), XRef drawing files and any other files connected to the AutoCAD drawing files that are on the disk.

The performance guaranty posted with the County shall not be released until the as-built process is satisfactorily completed.

11.14 MAINTENANCE GUARANTY

The permittee shall provide a maintenance guaranty in the amount of five percent (5%) of the final construction cost to be in effect for a minimum period of one (1) year. The maintenance guaranty shall be a certified check, bank draft, letter of credit or maintenance bond. Residential driveway applications will not require posting a maintenance guaranty.

11.15 PERMIT DURATION AND EXTENSIONS

a. Permit Duration: Permits for most work shall be in effect for one (1) year from the date issued. After said date, the permit will be void and a new permit must be obtained. If an extension is necessary to complete all work included under the permit, a request in writing must be made to the Engineer's office. The County Engineer will decide if any extension will be granted and its duration.

b. Permit Extensions: A permit may be renewed or extended for a period of time not to exceed the total time of the original permit, upon request of the permittee and upon payment of an additional fee.

c. Permits issued under the provisions of this regulation are not transferable.

d. Expiration of permits: Permits issued under the provisions of this regulation will expire at midnight of the day indicated on said permit, or the day of expiration of any extension to said permit. Permits may also be revoked at any time if it is found by the Engineer that the permittee has failed to comply with the provisions of this regulation or the permit, provided that written notice has been given to the permittee of such failure and then the permittee has failed to correct the defect complained of in said notice. If after permit revocation, it becomes necessary for the County to either complete the work or to refill and repair the opening, the cost of such work by the County will be deducted from any performance or inspection fees that may have been paid by the permittee, or if a surety or corporation bond has been given, then said bond will be declared to be in default to the extent of said unpaid costs.

11.16 VIOLATIONS AND PENALTIES

a. Violations

Any person or persons, firm or corporation violating any section of this regulation which results in damage to or obstruction of any public road, gutter, storm drain, ditch, basin, inlet or culvert shall be responsible for all expenses incurred by the County of Warren for repairing said damage, removing said obstruction in addition to the penalties herein provided.

b. Penalties

Any person or persons, firm or corporation violating any section of this regulation shall, upon conviction thereof, be subject to a fine not to exceed $500.00 or imprisonment for a period not to exceed ninety (90) days or both, each and every day that said violation continues shall constitute a separate and specific violation.

OFFICE OF THE COUNTY ENGINEER
COUNTY OF WARREN

WAYNE DUMONT, JR. ADMINISTRATION BUILDING
165 COUNTY ROUTE #519 SOUTH
BELVIDERE, NJ 07823-1949

DAVID B. HICKS, P.E.
COUNTY ENGINEER

JAMES A. BERNASKI, P.E.
ASSISTANT COUNTY ENGINEER

PHONE: (908) 475-6545
FAX: (908) 475-6566

COUNTY OF WARREN
HIGHWAY ACCESS AND CONSTRUCTION PERMIT
PERMIT FEE SCHEDULE

(Effective June 8, 2005)

		Permit Fee	6 Month Ext.	12 Month Ext.
1.	Minor Demolition or Repair (MD/R)	$ 50.00	-------	-------
2.	Residential Driveway Access (RDW) (without Underground Electric, Telephone, Cable T.V., Telecommunications Services)	$200.00	$75.00	$150.00
3.	Residential Driveway Access (RDW) & Underground Electric, Telephone, Cable T.V., Telecommunications Services (US) - Agreement Required	$400.00	$75.00	$150.00
4.	Underground Electric, Telephone, Cable T.V., and Telecommunication Services (US) Residential or Commercial - Agreement Required	$200.00	-------	-------
5.	Commercial/Industrial/Institutional Driveway Access (CDW) (without Underground Electric, Telephone, Cable T.V., Telecommunications Services)	$300.00	$100.00	$200.00
6.	Commercial/Industrial/Institutional Driveway Access (CDW) & Underground Electric, Telephone, Cable T.V., Telecommunications Services (US) - Agreement Required	$500.00	$100.00	$200.00
7.	Highway Construction (HC)	$300.00	$100.00	$200.00
8.	Bridge/Culvert Improvements (B/CI)	$300.00	$100.00	$200.00
9.	Utility Opening (UO)	$100.00	-------	-------
10.	Minor Utility Construction (UC) (≤500 L.F.)	$200.00	-------	-------
11.	Major Utility Construction (UC) (>500 L.F.)	$300.00	$100.00	$200.00

August 25, 2006

COUNTY OF WARREN
HIGHWAY ACCESS AND CONSTRUCTION PERMIT

Residential Driveway and Utility Construction
Basic Insurance Requirements

A certificate of insurance shall be submitted meeting the following limits and requirements:

(1) Worker's Compensation and Employer Liability Insurance

a.	Worker's Compensation	- Statutory Requirements	
b.	Employer Liability	- $ 500,000	each accident

(2) General Liability

a.	General Liability	- $ 1,000,000	per person bodily injury
		- $ 1,000,000	per accident bodily injury
		- $ 1,000,000	aggregate for property damage
b.	Umbrella or Excess Policy	- $ 2,000,000	per person bodily injury
		- $ 2,000,000	per accident bodily injury

(3) Automobile Liability

- $ 1,000,000	per person bodily injury
- $ 1,000,000	per accident bodily injury
- $ 1,000,000	aggregate for property damage

(4) The "Description of Operations" block shall include the following statement:

"The County of Warren is hereby named as an additional insured with respect to the general and excess liability coverage for all activities required to complete permit # _____".

(5) The certificate holder shall be listed as follows:

County of Warren
Board of County Commissioners
165 County Route #519 South
Belvidere, NJ 07823-1949

c/o County Engineer's Office

(6) A thirty (30) day notice of cancellation provision shall be provided.

Additional information regarding insurance coverage can be found in the County's "Development Review Standards" and the County's "Guidelines for Comprehensive General Liability Insurance Coverage".

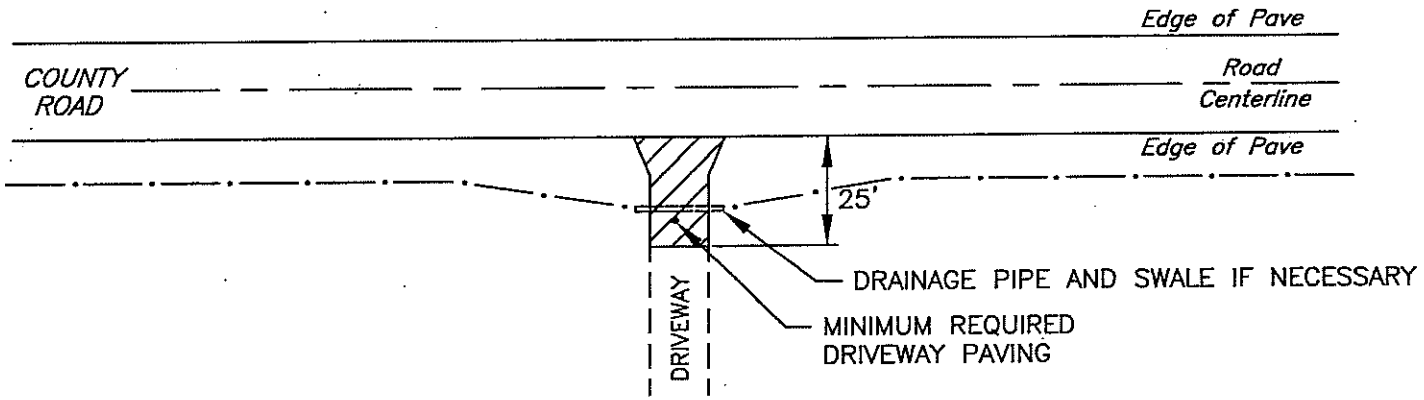

PLAN VIEW

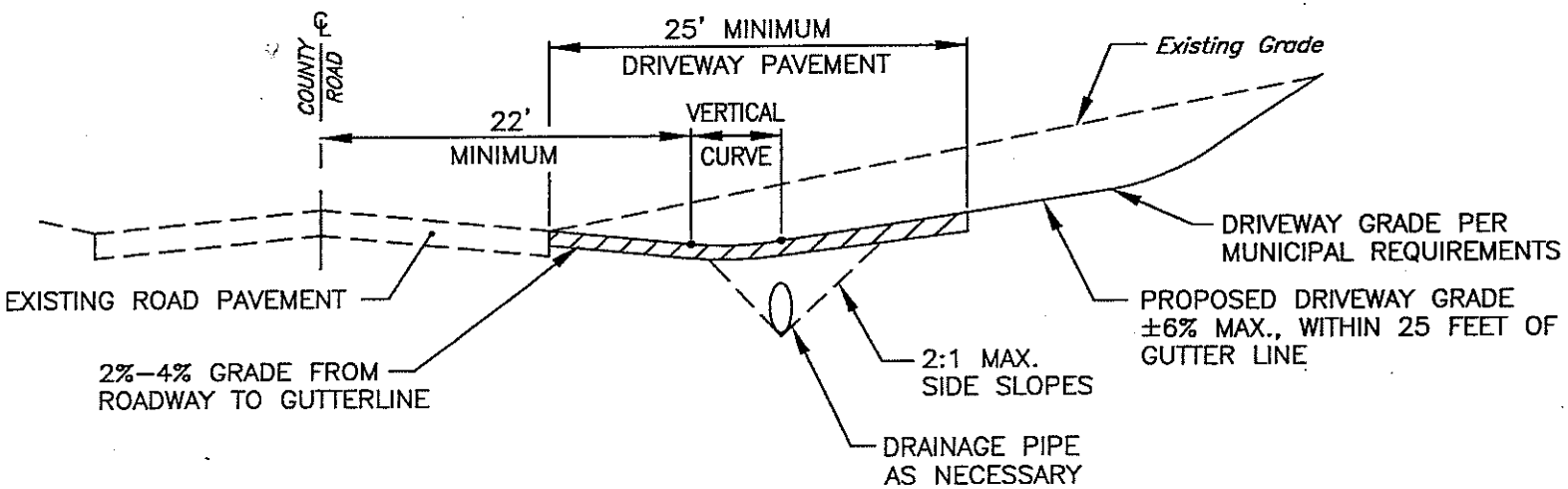

PROFILE

TYPICAL RESIDENTIAL DRIVEWAY

N.T.S.

POSTED SPEED LIMIT	MINIMUM SIGHT DISTANCE IN FEET (DESIRABLE SIGHT DISTANCE IN FEET)			
	RESIDENTIAL DRIVEWAY	MINOR DRIVEWAY	MAJOR DRIVEWAY	ROADWAY INTERSECTION
25	165	215	271 (395)	271 (395)
30	215	271	333 (445)	333 (445)
35	271	333	400 (500)	400 (500)
40	333	400	474 (555)	474 (555)
45	400	474	553 (610)	553 (610)
50	474	553	638 (665)	638 (665)

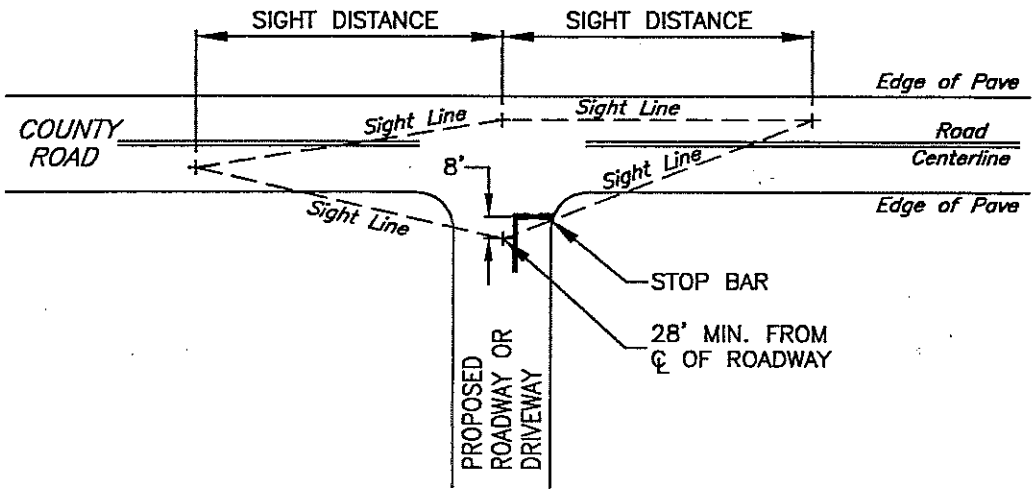

SIGHT DISTANCE REQUIREMENTS FOR STREETS AND DRIVEWAYS

N.T.S.